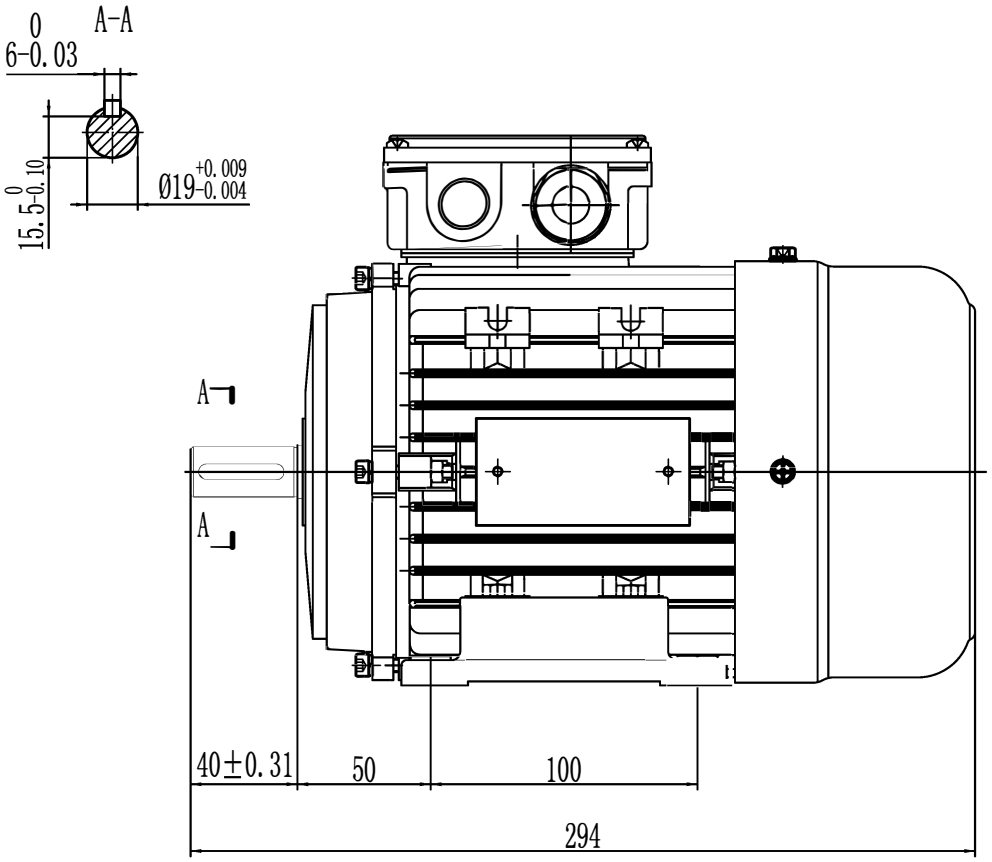

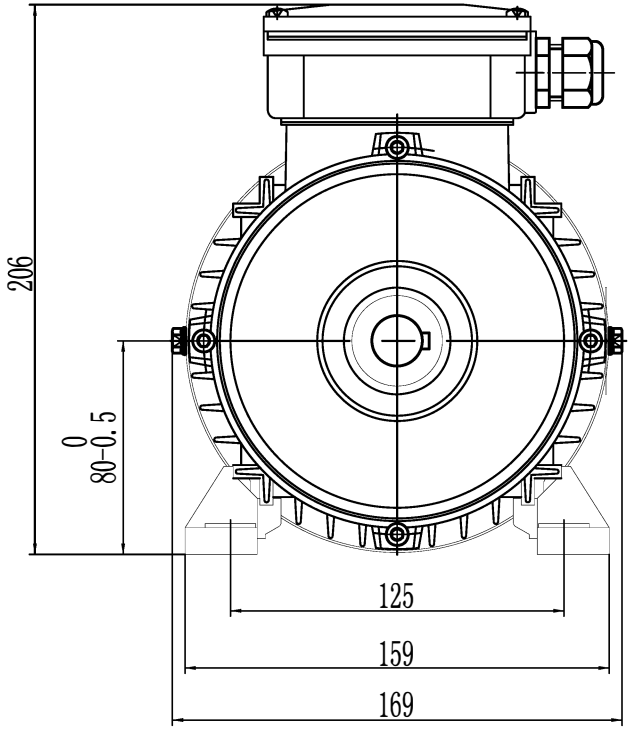

						DYMATEC INDUSTRIES
						DYM80A4IE2
					1:1	