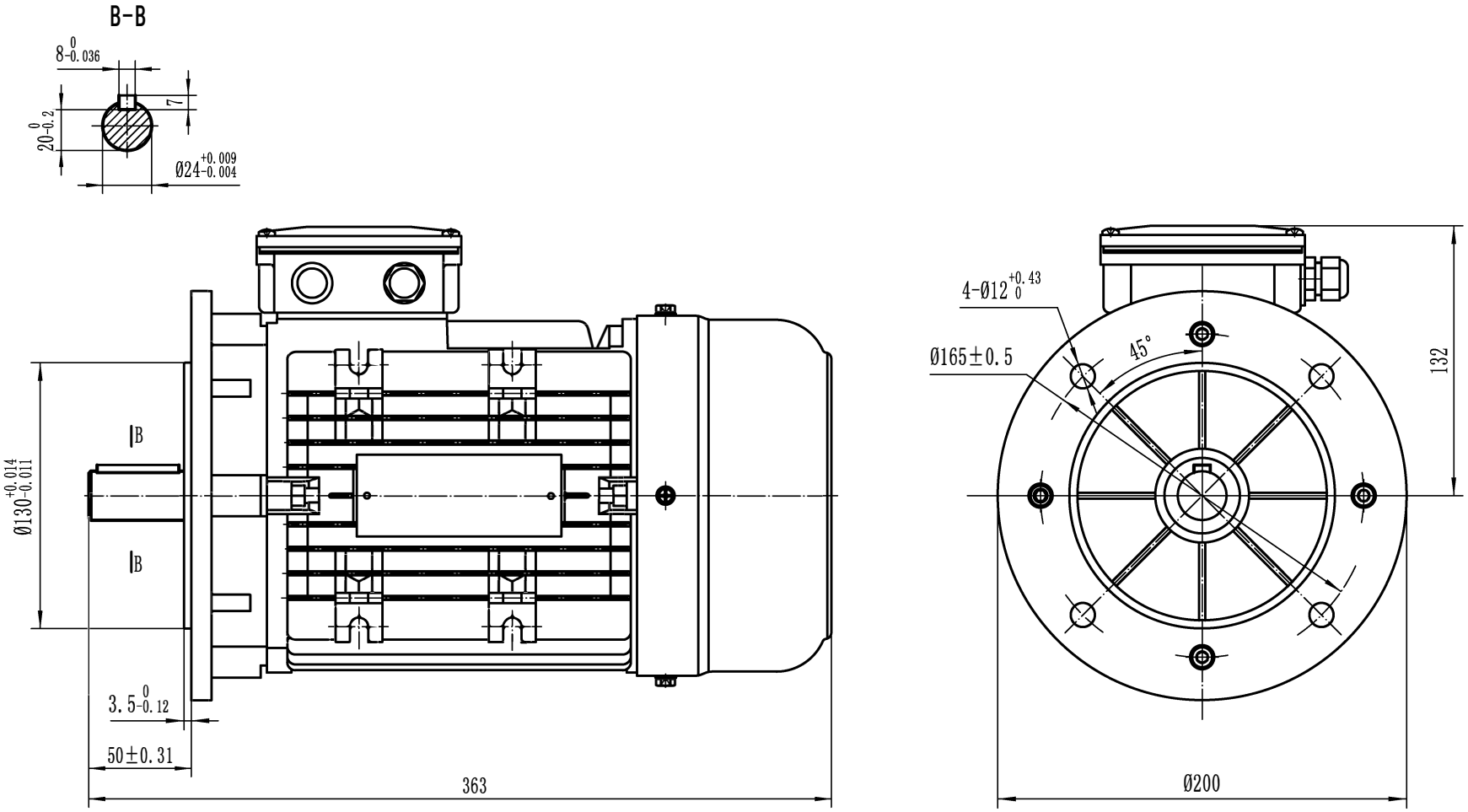

DYMATEC INDUSTRIES