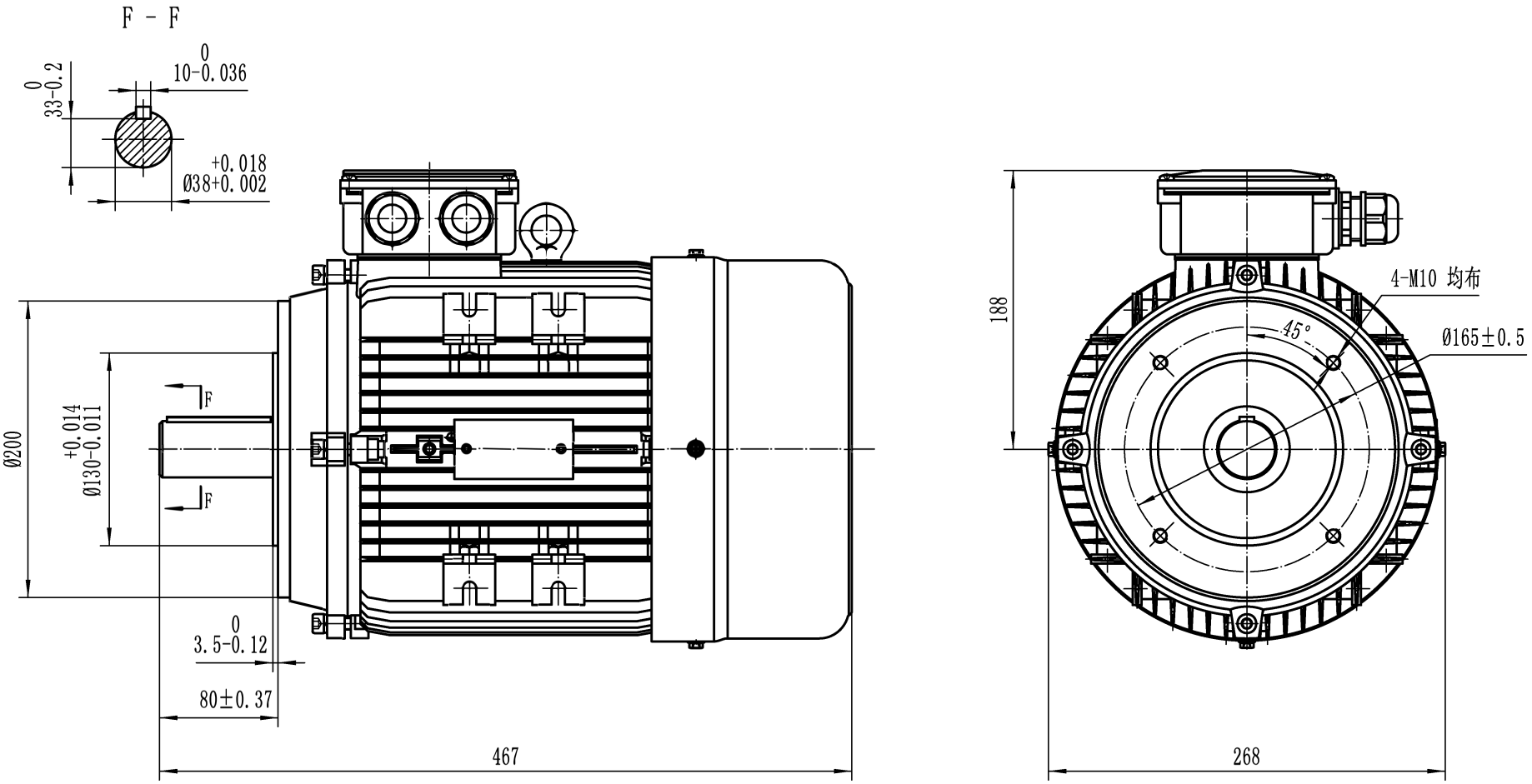

						DYMATEC INDUSTRIES